.....
.....
.....
.....
.....
.....
.....
.....
.....
.....
.....
.....

( )

	2017	2016		2015

			(%)	
	62,466,074,604.33	53,870,447,280.10	15.96	57,198,678,035.22
	648,047,109.47	187,333,479.38	245.93	539,853,976.10
	13,633,001.07	176,781,888.31	-92.29	70,678,314.04
	875,167,887.82	2,086,719,968.73	-58.06	2,937,036,433.89
	2017	2016	%	2015
	10,807,299,101.43	12,140,760,190.07	-10.98	12,222,721,450.49
	55,760,657,557.88	53,911,263,242.32	3.43	43,624,157,171.67

	2017	2016	(%)	2015
	0.31	0.09	244.44	0.26
	0.31	0.09	244.44	0.26
	0.01	0.08	-87.50	0.03
%	5.25	1.53	3.72	4.65
%	0.12	1.56	1.44	0.61

( )

( )

( )

2017

2017

,

, 9080 ,

, 2017

,

PPD RT TMQ
PPD 40% 2017

2017
ABS PC 2-
MEG
(DOW) (CHEVRON)
(BASF) (SABIC) (FPC) (PETROCHINA) (SINOPEC)

2017
ABS PC

2014

11%

: Halcyon Agri Corporation 2010 2013 2016 54.99%

12 33 140 39 200 12% 15000

100% 100% 80% 20%

100% 100%

2017

:

32 34.5 100%

100%

Siat SA/NV SIAT 35% 1.9256 SIAT FIMAVE SA/NV 87,476.37 ( ) 44.8% 2017

1 2000

2

2017

CentroChem HRC SINRIO

HEVEA Pro

2017 SIAT

35%

3

4

20

100%

A

2017

1

2017 201%
7% 2.9%

126%
3400 2017 6

2
2017

5 33% 2017 20%
2017

CentroChem HRC SINRIO

2017

2017

85.96 15.96%

(1)

,

1.47%

(2)

19.44%

22.85%

43.29%

30.18%

30.00%

28.67%

5.01%

2017 5.22 251 76
4 2 6 2

51 48 3

2017 5 10

2017

23

E-LAB SAP

2017 8.75 58%

2017 32.53 22.31

2017 21.40 31.3

1

2015 9000 2020 11000
5%
2020 13.8
4.0

1.1
2017

,

,

, , ,
,
1.2

36 4
500

1.3

6PPD
70%

RT 6PPD

1.4

2015-2016

ABS PC ABS
5% PC 7% 400
15%

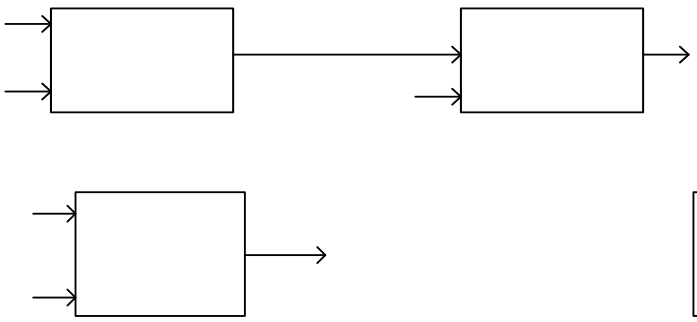

2017 10 10

2017-045 2017-047 2017 12 5

2017-056

1958 4 16,899.06
40.53%
1,254,642.78 712,382.57
798,492.63 78,697.72

2008 5 5.85
60.976% 456,727.57
365,180.60 282,313.89
41,198.99

2011 1 8
100% ,
285,471.91 81,436.36 339,900.15
8,624.59
Halcyon Agri Corporation Limited
1934 9.53

, ,

,

2

2.1

ARRTI

2.2

5

36 4

500

60%

2014

60% 2020 80% 47% 76%

76% 92% 50% 66%

3

3.1

PPDs

6PPD RT

6PPD

2017 6PPD

3.2

PPD

, PPD

4

4.1

45% 25% Brenntag Univar HELM MegaChem NEXEO SOLUTION

40 15%

4.2 :

+

Brenntag Univar

5

5.1

EBITDA

5.2 :

11% 2022 25.8%

3-5 20%

2030

6

6.1

6.2

2011

80%

Centro Chem HRC SINRIO

HSE

2018

HSE 6S+

1.

2.

3.

4. 6S+

5. HSE24 HSE

HSE

6.

( )

2012

2016 2,083,012,671

10 0.9

22,177,608.66 857,666,815.82 2017

187,471,140.39 648,018,066.77

2017 2,083,012,671

10 1.00

208,301,267.10 32.14% 439,716,799.67

2017 2017

( )

( )

( )

( )

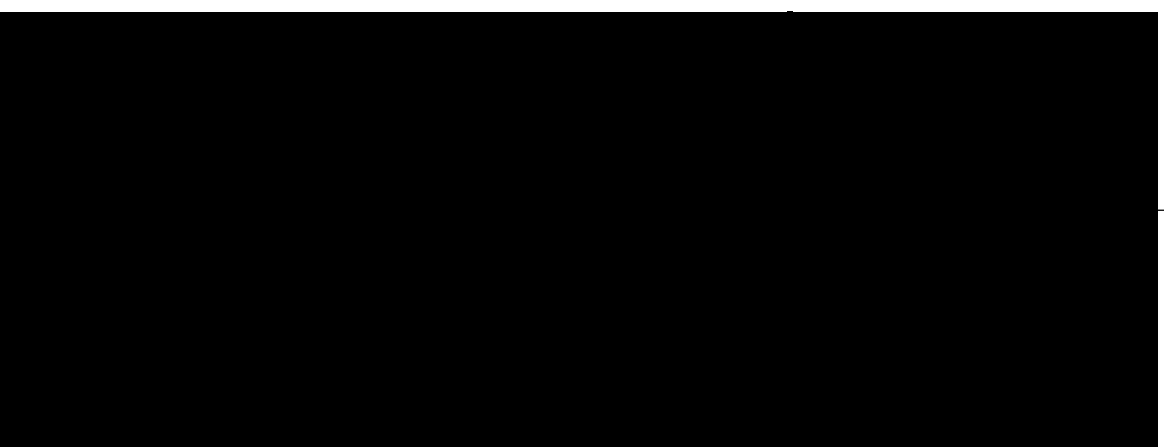

( )

1.

2017 4 5 42

(42) 16

(16 (2017)) 42 2017 5 28 16

(2017) 2017 6 12 2017 12

([2017]30) 2017

2.

1

([2017]30)

2

16 ([2017]15)

2017 1 1 2017 1 1

(2017 6 12) 2017 2016

2017 2016

3

42

([2017]13)

3.

2017

	/( )			
	2017	2016	2017	2016
	68,296,551.12	1,548,492.01	1,033,903.87	84,665.33
	85,855,507.38		409,400.00	
	154,152,058.50	1,548,492.01	1,443,303.87	84,665.33
	-157,815,373.87	-2,313,869.43	-1,502,814.84	-322,917.64
	3,663,315.37	765,377.42	59,510.97	238,252.31

( )

		2017	2017	%
		50,000	8,091.65	0.15
		18,000	14,918.54	0.24
		3,000	2,299.70	0.04
		100,000	49,399.28	0.89
		5,000	8,374.56	0.13
		60,000	30,201.78	0.54
	Newport Tank Containers LLC	20,000	4,185.23	0.08
	Newport Tank Containers LLC	30,000	11,465.04	0.18
		6,000	0.00	0.00
		300	69.34	0.00
		500	557.70	6.60
		18,000	183.62	0.27
		150,000	128,618.00	
		300,000	295,184.37	

( )

( )

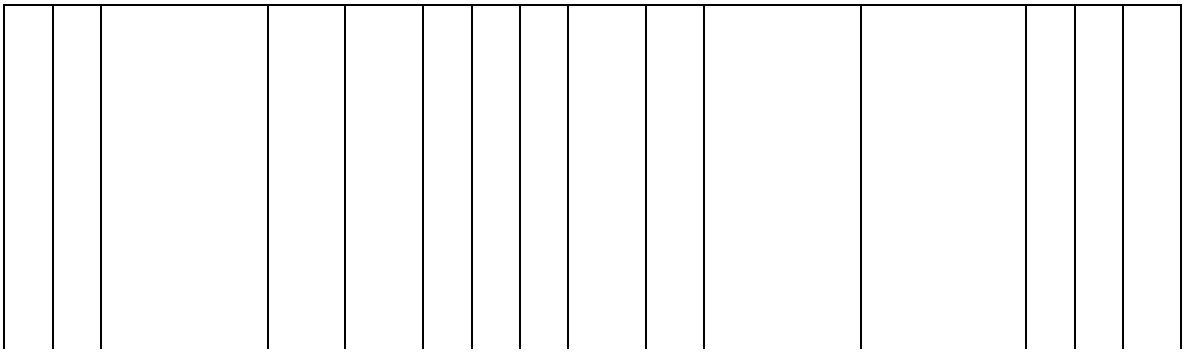

2017

http://www.sse.com.cn/

“ ”

“ ” “ ”

“ ”

PSSR

COD SO2

Honeywell

þ¶! +

+ ” COD 224

7 ή

( )

( )

( )

( )

( )

( )

( )

2012 3 5 2011

4 11 01 7 5

11 02 4 7

2016 7 12

4.99%

2017 2 6 http://www.sse.com.cn

11 02 11 02

2017 2 7 -2017 2 9

11 02

( ) 10

( )

( )

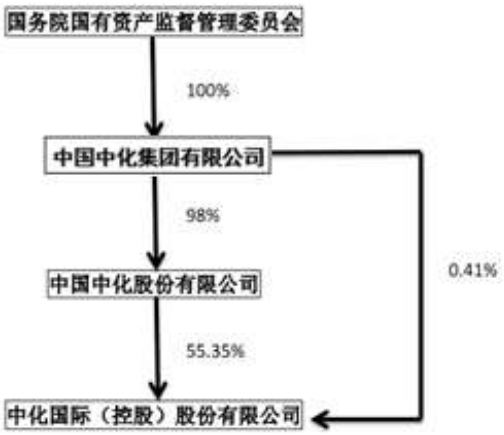
国务院国有资产监督管理委员会
100%
中国中化集团有限公司
98%
中国中化股份有限公司
55.35%
中化国际（控股）股份有限公司
0.41%

( )

( )

( )

( )

( )

( )

( )

( )

2017 GROWTH

- - - -

GROWTH GROWTH

( )

1 1 2

2 7 3

2018

2018 4 28

3 3 2 1

4

5

6 2010

7

( )

2017

http://www.sse.com.cn/

“16 ”		6 16
		010-56513200
“11 02 ”		
		760 8
“16 ”		
		760 8

□ √

2012 11 01 11 02 19

16.86

2016 16 25 15

10

31050161369900000216 2017 12 31

11 02 2011 7 21

AAA AAA 2017 5 26 11

02 AAA AAA

2018 5

http://www.sse.com.cn

16 2016 5 31

AAA AAA 2017 5 26 16

AAA AAA

2018 5

http://www.sse.com.cn

11 02

16

http://www.sse.com.cn)

2017 11 02

16

2

[redacted]

[redacted]

( ) (
) ( )
( )

1998 12 14
25,265
(1999)155 1999 12 21
12,000 1999 12 28
37,265 2000 3 1

2001 7 2002 9
10 5 55,897.5 2004 4 26
2003 10
2 3 83,846.25 2005 4 26
2004 10 2
3 125,769.375

2005 6 19
2005 7 20
8 5 2005 2005 8
10 ( ) 10
1.75 5.58 2005 8
12 2006 12 1 12,000 18,000
2007 12 17 179,895,821
143,758.9571

2009 6 1
([2009]358), ( )

98% ( )
2%

2009 6 24
([2009]447)

55.17%

1.49% 2009 7 24
([2009]262)

55.17%

30%

( )

( ) (

)

( )

2018 4 26

	5-50
	5
	3-7
	3-11
	3-5
	3-7

/

1

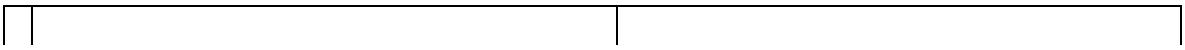

[redacted]

[redacted]

[redacted]

	231,095,231.94	832,439,999.58
	4,287,581,527.76	8,404,524,871.17
	9,156,668.50	30,971,632.57
	4,527,833,428.20	9,267,936,503.32

	11,272,064.34	142,569,328.10
	11,492,432.14	4,210,681.88
	22,764,496.48	146,780,009.98

:

	2,005,189,927.59	2,036,084,849.39

	2,005,189,927.59	2,036,084,849.39

0

	5,388,387,963.03	5,120,145,826.11
	5,406,478.11	181,808,182.95
	499,630,059.98	559,474,197.78
	5,893,424,501.12	5,861,428,206.84

1

	49,148,675.17	
	49,148,675.17	/

	3,448,316,037.73	
	1,001,382,491.13	1,318,156,857.76
	5,105,996.67	78,189,917.15
	4,454,804,525.53	1,396,346,774.91

1

	216,254,336.92	2,483,816,691.49	2,381,792,032.94	318,278,995.47
-	40,538,008.76	213,862,378.20	231,006,144.01	23,394,242.95
	279,977.96	11,080,969.15	10,501,377.34	859,569.77
	257,072,323.64	2,708,760,038.84	2,623,299,554.29	342,532,808.19

:

	148,102,130.92	2,009,453,682.36	1,895,604,173.01	261,951,640.27
	10,518,839.79	176,407,237.52	180,335,130.25	6,590,947.06
	11,341,403.51	80,884,374.02	83,819,576.67	8,406,200.86
	10,905,101.47	69,456,512.14	72,159,312.75	8,202,300.86
	191,173.24	6,934,503.08	6,921,776.32	203,900
	245,128.8	4,493,358.8	4,738,487.6	
	1,452,852.29	98,022,382.41	98,701,337.64	773,897.06
	44,839,110.41	119,049,015.18	123,331,815.37	40,556,310.22

	216,254,336.92	2,483,816,691.49	2,381,792,032.94	318,278,995.47

1	11,908,059.11	151,014,583.57	159,860,680.9	3,061,961.78
2	322,783.08	4,773,955.05	5,096,738.13	
3	28,307,166.57	58,073,839.58	66,048,724.98	20,332,281.17
	40,538,008.76			

		95,140,000.05
	141,589,212.38	139,098,155.38

	169,621,779.35	185,439,737.12
	46,089,481.92	54,671,000.27
	12,500.00	21,287,163.03
	62,779,155.56	57,535,015.21
	414,327,700.07	284,844,814.17
	30,731,110.50	
	211,698,723.46	273,387,774.38
	935,260,450.86	877,165,504.18

1

	5,082,189,802.03	
	5,082,189,802.03	

1	794,321,917.58	2,276,939,753.98
1		
1		3,228,868.27
	794,321,917.58	2,280,168,622.25

	2,445,888.93	3,316,675.37
	2,445,888.93	3,316,675.37

	330,817,890.68	1,195,027,615.57
		29,900,000.00
	3,136,246,547.09	3,440,090,302.48

	3,467,064,437.77	4,665,017,918.05

2017 12 31 1.44%-7.15%(2016 12 31 1.35%-8.25%)

11 02	1,192,967,567.88	1,196,520,390.5
16 01	2,495,559,377.69	2,493,418,357.05
Senior Unsecured Notes	1,941,933,107.28	
Multicurrency Debt Issuance Programme		594,758,817.66
	5,630,460,052.85	4,284,697,565.21

11 02	100	2012/3/5	5 +2	1,200,000,000.00	1,196,520,390.50		59,880,000	544,177.38	63,977,000.00	1,192,967,567.88
16 01	100	2016/6/7	5	2,500,000,000.00	2,493,418,357.05		90,250,000	2,141,020.64	90,250,000.00	2,495,559,377.69
Senior Unsecured Notes	100	2017/7/25	5	2,018,490,000.00		1,997,953,900.91	27,055,671.88	1,640,790.15		1,941,933,107.28
Multicurrency Debt Issuance Programme	100	2014/7/31	5	622,100,000.00	594,758,817.66				594,758,817.66	
	/	/	/	6,340,590,000.00	4,284,697,565.21	1,997,953,900.91	177,185,671.88	4,325,988.17	748,985,817.66	5,630,460,052.85

	5,566,563.20	2,336,021.71

-	138,143,292.43	83,532,364.15
	138,143,292.43	83,532,364.15

	83,532,364.15	79,590,973.43
	23,738,786.94	7,864,644.40
1.	13,716,097.41	-59,313.68
2.	-35,520.41	

3.	2,702,187.94	1,364,777.00
4	7,356,022.00	6,559,181.08
	10,278,468.59	5,025,767.43
1.	10,278,468.59	5,025,767.43
	20,593,672.75	-8,949,021.11
1.		

	204,210,614.82	120,000,000.00	264,761,443.64	59,449,171.18	
	3,152,052.31	400,000.00	14,563.11	3,537,489.20	
	207,362,667.13	120,400,000.00	264,776,006.75	62,986,660.38	/

						/
	7,000,000.00				7,000,000.00	
	7,556,880.00				6,942,212.50	
		7,540,600.00			6,032,480.00	
	5,784,888.00				5,444,600.00	
	5,279,463.10				5,098,220.62	
	3,850,000.00				3,150,000.00	
	3,285,713.49				2,714,285.69	
	3,627,800.00				2,641,800.00	
	4,616,491.00				2,140,006.00	
	2,142,858.00				1,714,285.64	
		1,653,680.00			1,653,680.00	
	1,480,000.00				1,480,000.00	
173 1400	1,211,000.00				1,038,000.00	
		1,000,000.00			1,000,000.00	
2015		2,000,000.00			857,142.87	
		820,000.00			820,000.00	
263 30	1,127,142.87				751,428.59	
RTO		1,054,285.71			673,571.40	
	786,666.62				586,666.62	
2016 -	571,428.00				457,142.87	
100	750,000.01				416,666.69	
	500,000.00				400,000.00	
	193,000.00	200,000.00			393,000.00	
	200,000.00				200,000.00	
2017		270,000.00			192,857.15	
20	150,000.02				83,333.38	
		100,000.00			42,857.13	
		14,563.11			14,563.11	
376	537,142.74					

501	298,214.11					
CTC		1,762,102.16				
	50,948,687.96	16,415,230.98			53,938,800.26	/

	15,819,985.85	16,834,870.48
	8,281,700.98	8,654,186.92
	6,968,000.00	6,968,000.00
	3,035,813.19	3,035,813.19
	4,094,888.85	3,153,563.38
	38,200,388.87	38,646,433.97

S

	84,460,214.81	18,218,410.09
	6,174,416.73	11,896,489.53
	91,652,037.31	2,174,840.59
	107,803,717.17	211,587,304.62
	290,090,386.02	243,877,044.83

	2,775,385,631.04	2,029,138,920.18
	52,405,039.40	107,930,294.14
	14,169,124.43	143,672,880.06
	107,928,723.88	6,034,060.04
	2,949,888,518.75	2,286,776,154.42

:

	3,448,316,037.73	
	180,400,000.00	340,000,000.00
	656,669,896.00	1,278,687,652.28
	11,272,681.27	
	4,296,658,615.00	1,618,687,652.28

	38,528,199.12	243,524,892.29

	143,092,274.35	

	807,480,780.12	535,282,384.22
	-900,902,771.38	96,912,782.64
	175,555,347.35	-166,942,024.48
	-121,759,264.21	-233,789,347.23
	-321,948,013.78	-1,106,422,658.41
	1,299,653,593.77	-653,181,470.83
	-3,881,660,971.88	1,213,009,095.36
	39,327,074.03	311,606.28
	875,167,887.82	2,086,719,968.73
2		
3		
	9,923,412,838.14	8,020,487,330.18
	8,020,487,330.18	5,060,363,797.68
	1,902,925,507.96	2,960,123,532.50

	9,923,412,838.14	8,020,487,330.18
	27,617,916.61	3,713,269.84

	9,867,820,386.77	8,004,234,998.91
	27,974,534.76	12,539,061.43
	9,923,412,838.14	8,020,487,330.18

√ □

: :

	100%		2017 12 29	2017 12 29	18,598,942,005.00	243,612,008.82	14,336,758,711.50	130,494,862.27

2017 12 1,743,996,715.01

100%

2017 12 29 2017 12 29

√ □

- -	1,743,996,715.01
- -	
- -	
- -	
- -	

□ √

SDCI Singapore Pte. Ltd. Soci t de D veloppement de Caoutchouc Ivoirien S.A. Wurfbain Polymer B.V Corrie Maccoll Rubber Ltd Alan L Grant Polymer, Inc. Sciesen America Corporation Sinochem International Development PTE.Ltd

11

16

27

2017 3 11
2017 11 30
2017 11 2017 9 4

2017 11 30
2017 11 2015 12 23
Green Ventures Cameroun SA 2017 5 10
2017 5

				(%)		
Sinochem International (Overseas) Pte.,Ltd				100.00		
					51.00	
					51.00	
				100.00		
					99.71	

Hevea Cameroun S.A.					45.90	
Tropical Rubber Cote d'Ivoire					26.11	
					60.98	
					60.98	
					60.98	
Ivoirienne De Traitement De Caoutchouc					30.60	
Halcyon Agri Corporation Limited					54.99	

: 'W ‘F ‡Ÿ$ (A ’C õv b r b

√ □

: :

				(%)		
				29.19		
					25.00	
FeltexCo.,Ltd.					45.00	
					37.00	
					29.00	
PT Sarana Sumsel Ventura					33.00	
					50.00	

20% 20%

√ □

	/	/
- -		
- -		
- -		
	1,046,616,232.79	3,241,685,648.38
- -	242,005,729.86	-21,813,186.97
- -	14,950,277.84	-1,178,888.26
- -	256,956,007.70	-22,992,075.23

1

2017

		9,438,171,904.51		9,438,171,904.51
	50,174.72			50,174.72
	82,905,837.88			82,905,837.88
		2,668,005,994.60		2,668,005,994.60
		5,071,010,102.15		5,071,010,102.15
		27,533,104.02		27,533,104.02

		8,123,639,188.07		8,123,639,188.07
	7,211,520.00			7,211,520.00
	77,087,178.36			77,087,178.36
		2,168,470,247.94		2,168,470,247.94
		5,251,053,695.23		5,251,053,695.23
		43,143,926.60		43,143,926.60
		921,897,300.78		921,897,300.78
		2,097,534,927.01		2,097,534,927.01
		23,078,306.90		23,078,306.90
			1,369,180,268.96	1,369,180,268.96
		668,525,057.09		668,525,057.09
	84,298,698.36	19,297,342,649.62	1,369,180,268.96	20,750,821,616.94

		9,267,936,503.32	9,267,936,503.32
	7,211,520.00		

2017 12 31
1,613,538,272.45 (2016 12 31
1,068,916,328.07) 2017 12 31 1 12
(
)

2017

3

2016

: :

	47,797,076.53	35,158,936.07		82,956,012.60
1.	47,797,076.53	35,158,936.07		82,956,012.60
1				
2	50,174.72			50,174.72
3	47,746,901.81	35,158,936.07		82,905,837.88
2.				
1				
2				
	824,556,754.97			824,556,754.97
1	554,000,000.00			554,000,000.00
2	270,556,754.97			270,556,754.97
3				
1.				
2.				
3.				

1.				
2.				
	872,353,831.50	35,158,936.07		907,512,767.57
	11,272,064.34	11,492,432.14		22,764,496.48
	11,272,064.34	11,492,432.14		22,764,496.48
	11,272,064.34	11,492,432.14		22,764,496.48

				(%)	(%)
			398	55.35	55.35

1

3

( )	
( )	
( )	

Sinochem Trading (Singapore) Pte Ltd(( ))

( )	
Newport Europe B.V.	
SIAT NV	
Newport Tank Containers USA LLC	

/

Sinochem Trading (Singapore) Pte Ltd		661,358,507.85	783,373,257.97
		456,843,021.53	458,981,386.05
		347,052,583.07	
		302,017,787.17	189,864,116.82
		147,895,665.00	64,621,161.58
		126,169,786.30	60,954,278.87
		37,149,757.39	386,432,799.97
		37,092,053.85	9,147,694.72
		32,007,227.02	
		12,052,359.88	9,233,539.85
		12,038,854.69	1,147,786.32
( )		7,543,398.39	1,576,579.50
		4,778,965.81	996,743.59
		3,727,416.69	2,492,408.54
		2,114,293.33	
		1,579,350.43	2,464,623.94
		1,183,320.36	427,128.76
		1,117,948.72	
		775,897.44	65,035,223.68
		450.45	12,817.09
SIAT NV			433,347,257.86
			30,206,996.98
			6,160,971.03

			1,468,826.84
Newport Europe B.V.		41,852,315.00	95,476,360.01
		8,329,536.87	
		2,856,310.68	4,589,320.41
		1,769,811.28	1,045,754.69
		1,668,489.04	2,407,336.63
		906,062.11	
( )		561,212.93	1,753,142.89
( )		553,582.03	508,756.60
( )		326,815.48	734,363.21
		31,698.11	
		28,301.89	
( )			2,171,171.17
			2,154,734.55
			98,391.61

/

		632,051,895.23	405,026,116.84
		177,816,567.80	
Sinochem Trading (Singapore) Pte Ltd.		155,067,920.61	
		84,862,678.51	22,722,089.57
		53,774,678.80	

		20,095,119.43	45,402,206.86
		11,751,427.15	18,853,779.98
		9,660,495.69	3,880,284.83
		5,841,635.08	3,059,059.28
( )		2,789,993.29	2,634,664.95
		2,577,464.16	13,309,571.29
		2,232,630.77	1,899,333.34
		289,334.85	504,008.82
		67,657.66	
			3,753,148.48
Newport Europe B.V.		114,396,739.17	176,044,935.56
		8,558,988.61	4,685,224.58
		6,535,443.83	1,168,408.44
Sinochem Trading (Singapore) Pte Ltd.		3,865,829.04	2,418,517.94
		1,652,161.52	1,370,688.07
		693,396.23	693,396.21
		675,289.24	
		669,081.11	477,139.24
		589,187.72	36,774.51
		533,962.26	1,028,795.21
		300,041.37	276,654.29
		278,700.00	243,713.00
		273,584.91	
Newport Tank Containers USA LLC		253,667.52	399,692.93
		176,951.12	

		126,215.86	
		125,283.02	
		54,640.00	198,634.84
( )		42,575.14	
			301,116.77
			2,830.19

/ /

/

/

/

/

		14,572,108.45	16,698,194.18
		10,514,434.55	5,959,043.13
		4,382,921.63	5,230,682.62
		3,554,176.26	1,182,058.76
		1,991,608.84	1,071,807.14

( )		1,332,963.39	1,857,077.18
		403,119.43	7,806,149.13
		234,720.01	409,083.44
		196,208.47	
			286,493.23
			107,889.68
			62,315.61
			1,830,447.82

		11,580,736.58	12,025,214.13
		9,919,216.37	2,732,110.61
		8,343,226.26	9,958,867.80
		4,011,972.13	
		2,623,861.26	2,434,823.47
		1,387,790.71	1,287,659.54
		137,142.84	144,000.00
		4,000.00	
( )			25,253,895.29

	200,000,000.00	2015 8	2018 8	

	92,000,000.00	2017 1	2017 12	
	50,000,000.00	2017 7	2019 7	
	50,000,000.00	2017 2	2018 2	
	80,000,000.00	2017 1	2017 12	
	50,000,000.00	2017 7	2019 7	
	50,000,000.00	2017 2	2018 2	
	200,000,000.00	2016 10	2019 7	
	100,000,000.00	2017 1	2018 12	
	100,000,000.00	2017 3	2018 3	
	80,000,000.00	2017 7	2018 7	
	1,200,000,000.00	2017 7	2019 7	
	70,000,000.00	2016 10	2018 9	

	800,000,000.00	2016 10	2018 10	
	340,000,000.00	2017 7	2018 7	
	200,000,000.00	2017 9	2018 9	

	784,104,000.00	2017/6/9	2017/7/10	
	300,000,000.00	2017/11/2	2018/5/2	
	300,000,000.00	2017/11/20	2020/11/20	
	300,000,000.00	2015/10/30	2018/10/30	
	120,000,000.00	2017/2/8	2018/2/6	
	70,000,000.00	2017/4/27	2018/2/6	
	60,000,000.00	2017/12/28	2018/12/28	
	57,180,000.00	2017/1/23	2020/1/23	
	23,000,000.00	2017/2/22	2018/2/6	
	22,000,000.00	2017/5/9	2018/2/6	
	19,000,000.00	2017/12/5	2018/1/4	
	15,000,000.00	2017/12/18	2018/1/17	
	10,000,000.00	2017/4/1	2018/4/1	

: :

		276,115,001.45		157,137,838.44	
	Sinochem Trading (Singapore) Pte Ltd.	123,522,057.33			
		29,452,475.24			
		4,733,750.00		3,117,162.63	
		3,786,235.36		2,424,556.00	
		3,080,548.74		4,105,818.93	
		1,601,991.63		1,496,797.78	
		892,441.27			

		735,000.00		735,000.00	
		632,687.30		258,237.50	
		606,322.60		754,463.60	
		221,940.00		239,316.00	

		1,049,979.80		25,200,000.00	
	( )	61,689.00		2,733,391.84	
		8,460.00			
	Newport Europe B.V.			490,524.98	
				283,656.00	
				2,600.00	
		74,900,434.73			
		20,825,607.33			
		9,765,404.57		7,199,226.83	
		2,953,443.35		2,953,423.35	
		1,921,164.48			
		1,033,833.37			
	( )	954,520.06			
	Sinochem Trading (Singapore) Pte Ltd.	778,883.20		28,552,899.06	
		650,964.58		650,964.58	

		618,125.22			
		566,000.00			
	( )	388,468.70		389,468.70	
		131,650.10			
		3,612.90		3,612.90	
		3,236.40		3,236.40	
		2,000.00			
		600.00		1,200.00	
	Newport Tank Containers USA LLC			16,956,511.45	
				4,805,586.97	
	Newport Europe B.V.			3,933,351.91	
				1,915,120.30	
	( )			716,225.48	
				39,412.66	
		13,775.00			
		3,050.67			

: :

		1,590,000.00	
		64,369,180.45	81,347,499.34
	Sinochem Trading (Singapore) Pte Ltd.	27,231,433.69	258,185,306.72
		22,089,375.77	15,158,718.60
		11,536,628.00	11,317,167.00
		6,491,704.55	6,491,704.55
		4,447,641.35	
		3,957,400.00	
		3,539,076.49	3,639,076.49
		2,545,923.86	1,059,923.86
		1,883,700.00	
		1,400,000.00	441,747.57
	SIAT NV		271,156.44
	( )		37,400.00
		590,003.92	
		188,679.24	
	( )	43,724.40	43,724.40
		19,400.00	
			675.00
			9,731,530.00

	Sinochem Trading (Singapore) Pte Ltd.		190.16
		22,098,096.34	22,665,794.65
		13,324,709.61	15,389,143.19
	( )	700,000.00	1,300,000.00
		40,414.00	
		11,675.71	146,752.00
		600.00	
		585.00	
			9,761,400.00
	( )		2,106,489.42
			625,925.22

( )

2

	208,301,267.10
	208,301,267.10

3

4

	7,225,459,598.31	6,997,755,279.84	227,704,318.47	56,402,334.74	171,301,983.73	154,555,974.01

(1)
(2) ;
(3)
(4)

(5)
(6)
(7)
(8)

	15,310,341,224.72	2,792,209,202.88	5,186,214,627.92	25,371,492,775.37	3,388,522,292.31	7,836,060,944.88	2,567,036,182.98	14,197,353.27		62,466,074,604.33
			51,223,381.08					82,936,882.08	134,160,263.16	
	67,712,473.91		-6,499,765.40	8,610,492.12	71,999,449.00	25,282,645.50		74,900,434.73		242,005,729.86
	1,023,430,355.13	13,299,596.07	1,273,371.85	58,354,330.69	10,960,881.89	65,319,277.28	-1,246,580.95	-852,803.91		1,170,538,428.05
	182,384,765.14	116,231,709.26	327,221,717.44	10,534,748.43	47,510,667.71	616,915,746.51	1,523,543.91	71,417,928.45		1,373,740,826.85
	128,540,248.35	555,724,933.72	227,704,318.47	237,162,497.26	83,259,529.76	915,497,281.35	60,769,909.94	-169,034,932.30		2,039,623,786.55