600500 @1T/L

L 6u 6uL@

HHy

441

9

@:7:7A

Auu (M! BE @KZ+—,XuAuy

@B B 1uAuOBB 4v AuXBBAu1u

, / AHyBuy,X,r.BH

h 4:7uA,XyGNX@/GE@r6uNX

4AuuuAu 2016HL@yEr),X 27,422,563.43

tHG! 1,062,117,902.54 2016HÏÀ!X6u 229,131,393.81a

10n,-@/ 2,742,256.34Ho6uG¦X 857,666,815.82

B@CG(A,Gb@4v,XGn)AG@ 2016H6u

2,083,012,6716uD6u! 106u]G6u 0.9/AuG!

GN 187,471,140.394oG¦X 21.86%-G! 670,195,675.434E@

H

G! NXNO@ 2016H 6uEE

A ÷LE,XNL

y ¥ È

,6u6uG6(M2494CG

ú

,En1/co,X

ú

1 GNL/

y

,)

18V 1

.....1

.....5

.....11

.....36

.....51

.....56

.....57

.....66

.....70

.....74

.....265

18V G

AAG		
L		L
6u		6uL@
L /@		L6u6uL@
@pL		38@pLL@
@p6u		38@p6uL@
3E6u		+E3Ep9C6uL@
9:		9: /TL@
,@		Halcyon Agri Corporation Limited
GMG		GMG Global Ltd
0(		0(L@
p		pL@

18V @1TUBu

	SINOCHEM INTERNATIONAL CORPORATION
	SINOCHEM INTERNATIONAL

6(26(2

6	233 12	233 12
	021 31768000	021 31769818
	021 31769199	021 31769199
	ir@sinochem.com	ir@sinochem.com

1T

@ K7+CAPKSC 233 12

	2016	2015		%	2014
3	11,171,952,762.45	11,326,092,100.82	11,305,732,913.28	-1.36	11,215,019,675.38
	50,010,834,179.87	40,458,731,705.78	40,337,817,306.82	23.61	39,181,801,641.72

( )

2015H

2016H

l': Wî nä š íV lVð Ðnä š í •|

	ÿ	/	!
	17 7-9	17 10-12	
	9, 259, 809, 053. 89	11, 772, 459, 959. 23	
	46, 597, 284. 32	-130, 528, 800. 29	

X " ý#z

1 5 5

5 55

1 1 3

45 1

141 2 4

2 4 G20 4-

,X499,X

p u 498,pC49riCB(T,XEu9L89

1p9CP@[MP@[M/52 4 (,XpE

5+ E 3 +oh(4,X(LEE)pNZ,XNZo

h5b3EF@E (4)1/,X06P0p

9C,XNZ0Z+,R-4 2000 -44,X95%4X,X

vu2,₱9CuNZ,Xp9C-.Cd,Xs9CCd6

o64 17 / 40 -/M6),R-)t6o 20.5

/H7(140 -Z,nG 2016 HU97₱

S+EEWT9+ ,AELrKSbNX

56 2016 H@ 56uoE,@G,XM6HZ,Z

/t6Z 140 t6 12 @NK/ 200 HG 7

t6 4)t6,X 11%4nZ NZ! 2016 H 56uEH,X

! U6112EH 56 ;4u49

NL9EWL 56:u9:/TL@)NZ,X 56:o

hL5 PPD K RT..P4 TMQ 1UL5

PPD)NC 40%44t 2016 H 56u -0)6.v

n91+941M 6B9K ,L%0G0 sm

,XH4aP

((,X74 (uoh ,

)f1h,XEEg8K)f1,XL55K4G₱

3 2016 H)4rKS4ok

46 88L5rKSEW7(Et;0t%

Cu 49 8Z--6+G MEG6.-6.

!:1AuNZL! (DOWXC// SECKQ (CSPC)

5b. (EXXON MOBIL)L/Um (CHEVRON) (BASF)m(M.@ (SABIC)% (FPC)

- (PETROCHINA)- (SINOPEC)1Loh0CKZ8CQ,X0G2

t5EMR1A0Z@,Xu

L+ //c+5TA-LK35b1 Umo,XGE

u3o4P,Xru 2016 H. s

5bCD,XE4X-,6Ek C

S+U499Zn,XoG6dM6Lco4M,XE9:S

46L0:+jv Q--u6ne

E

y @UC ,X U 2016 H 8 23 M2C

Halcyon Agri Corporation Limited 6 2016 H 12 31 @C 500.11 EW

H H rt 23.61% WC 234.04 4C,X 46.80% 2b @6u,X

C 111.72 EWHH 1.36%

E

1/,X Hu4 6o@r)E@

7 2000 H94EH,X+9E@L4+C u,X @E@

24 ,XLE9,XL/,X Hu4 6oe

L4E@),X6o

H9 @ EEiCC9ZGBCC6u GMG 9:

, @ @p L iCb3E 6u 1-NNr)E@4nZ8C

1 11

EH,X@ . .t.,X)1+9b0@

+9E@U,XuNM,rZ)EZF)Gr)ZiC,

5Z@u4,X4

EEH,Xo @ 4EZ,+9-0+9PCH4

1u)6 6,XH,X+91u)26Z NZ,X Hu4 6

o 24 (56 1u NZXEH @ 0,

6o k

2u0U49L,XE9

Lc-4+9E@@9E6249r)E924

uZ,puKmu 56:u 56u,/

t9at(u6Z-9(u,X

Z,.Ln4E)NZ

pusE@Z,nGp9C,Xp9CE9/PDp9C(

@),X pE Roundup( )97KEo,X(

,X /5 P@{M 2 17( )GD620L89BNZ{

9080(1/ + 8CQ@@ pE

(,X(449GD6201/p9ŒEiC3E6ur)

@PBp9C,X-ohoZ0n,XLpn@EEC3EF

+nAD9C+:3tRGD620L89

u99 pE (,X(b 2013 Hs9k% pE ((

2014 Hi@ 0(C L ,Xp9Cup 2016 HC L

p9C-L@ Lp9Cu,XH 4EEHCdH) , ,

p9CuK-,XH5 , HNZEW,X

s9C. , n,Xt ,X/Cd , FK(, /%0o

Ps9CM6),R- ,Z,nG

2012 HEEC@pLU6u9kZLn, X.E94

P@pLKEW, X-roT/E@ 6o8NA+1

/, X, @pLH, X, X4G+U, X24

AK24F7b)bNZ!

)24, X6o0NK

@EEC9: Eo 56:u)NZK0o, X 56L5

6PPD oh 9: EEH, X9-0G 56L5 6PPDK

RT , XGKTEE , XT8N8NTG)

NZ L, X9G 56:u/UKLv, X+9

0G2K(2E9vuG6, X0@9k

2GkBE(M1CEB6E, XAA 0 Z)8, X+90

G2

@ 56u0E96o6), X.N

Z, Xb)NZ! 2004 Hr, XCd+9@EECH

L6tV/Z, 56/tE)8V, X9

E 2016 HC t5@ , @/)8V@2 6u 6uM2

+n, X/)1t)8V@ , X 56t6o

) ! U+nM29)8V@, X5%4F)

40CKZ, EB6 56, X9 5%4 L2Gk(M

BEM5o1)EB6, XGUoh

@(uCroLn1u)TNZCE06oNZKEW, X

0o@28KC KN1 nF %

174NNZ881u)M6@EL1u) ISMC, XUU8

84EL CDI, XAA SHELL BP 1UL-@, XHBGP0

P0, XCBU@En, XL55 2013 H@

C)L5E9 Newport Tank Containers, LLC @6uL5 (u

/, X 5 K C E 2.3 L 5)1 L5(uE96 Z

)L5E95%4KE, XL5E91u)T1u)6o9rKS%0o 2016

2 FAwFFuAuEH9@F)G

UG5LKHE

18V 49AA d

2016 H)4)8k4) L CDE9

vir)PEPErKS,XE@

@M6U,XF)W:r .n(g49C E@) ,X49

uU oE8DL86u)WE49)EWL@

9ur)rKSr)2b@6u,X 0.57

24puM6,X)WFHdEEH9F

,XoLr24KmuE

hAH491+9HOEC,X

NNh)P,X)C/UrG8NT,X4Et

)Ai9)1u)6 oA,XoM6E96o)

56 5%u44t-0)6.vn91+9)

41M6B9KL%0GO H4aP

56u4uGNN6uCF)CdHuX1u)

KE9CdG5B.) 8CCCOBrNMO

M68,X)W8EuIAEo/UvL5u/U)5b7

4Ar)H,kZQ 4

Cu49NL,X.LCdo)49

)44M6C

yU49

[redacted]

124

3

-GKK -p9Cm, XrC4)4G b

NZ! 2016 Hr2, 4E8)18NT

E , X%0r)ZT4G, XE9r29

, X4n, X91+9P0, X+900, X

Z, { 6B5E9r@p6ul%0otP9GC

9T9+ , AKN19, X45

pu04, Xp9CGFr)1u)p9CuEEo

h6L! 9rKSH/1u)X

0, XFCdr)rKS +bpS+K@, X%

37pu4Hc3

2 56

56:u44) PPD NZ5, M6v, X+9G2

44Gv, X-oh1yAAE¦Xv1u

)4vLdX7D CSR 2ALA, X CSR

AuOj 4)y, XNv, Xo h4C

5D+nGIn1+944Ev1u).BN, XG

NLACGL49NL 2016 H 56:494aP! 12%

6u.n9+9vG29G)LNZEB6v

OEB6hTt 56uvG2)4M6, X7obv

o6, XH4E76, XvAAM27tV

vAAM6kE)7Lc-uGH, X9 M6

uG, X4NZH)Cd95%4/UAv4vG2(

AM6)6, XAH4 HEVEA PRO E6P0(9

vBvN

3(

8EuM6M6EL¦X74EE/UAGEoR COA v1oP

¡490n74 38K 8 3 70j7A4P8Eu49G1KS 9.8%

25120

1 18.9%

4Cu

M6uutVvAo:rAv);

49NLZ ,XL(AH1+9u7D4

,4X496.GC61ur)ZEWQ,G6du

FEEC8V,X--1ur)ZEWrKS 2016 HS+

r)ZEW,XrKSF0949.BHNL,X

.r)ZEWQ,X4urKSZ 1543urKSZ 757--

u rKS 1206 6.GCurKS 2117

			%
	40,656,746,011.76	43,746,804,638.95	-7.06
	36,043,432,179.90	39,202,753,178.21	-8.06
	992,594,030.89	1,007,342,652.70	-1.46
	1,941,026,134.42	1,625,182,107.70	19.43
	424,159,108.31	539,847,311.99	-21.43
1	1,918,910,234.80	2,346,329,436.64	-18.22
	-2,379,831,566.97	-2,194,563,030.76	-8.44
	3,082,669,104.05	-801,796,196.26	
	318,191,728.22	283,226,147.32	12.35

1.

E

@ 2016 HUL95E9EWH 30.9 L! 7.06%

(1)9B2E

. s5bCD,XE4X-,6E

kC97PHHbLHo

EW674E7LLE9j12E

obE9X7

3

8.12%

uM6 ,6.244Cu497 9EWL!
27.93%

56uM674E HC. 7 HuH
)GLE9L! 8.04%

(2)972E

p up E,X/UKr)9! 7.36%

56:EE6.vv4Xr)9! 3.44%

(u8EuBGrKS 9.8%L549G! 18.9%9!
4.41%

(1). Ú 9%

: / :!

9u							
		99	9	) %	99! Hr %	9 Hr %	) ! Hr %
u	p	283,710.79	232,881.55	17.92	7.36	6.06	rt 1.01 ,R
	56:	227,291.39	148,794.04	34.54	3.44	2.74	rt 0.45 ,R
	mK	546,850.29	427,245.68	21.87	-8.12	-5.18	2.42 ,R
	(u	403,489.85	313,724.73	22.25	4.41	0.16	rt 3.30 ,R
	u	932,587.15	911,423.12	2.27	-27.93	-27.90	0.03 ,R
56u		1,189,878.47	1,097,856.27	7.73	-8.04	-9.59	rt 1.58 ,R
Cu		481,866.66	472,417.83	1.96	50.01	50.66	0.43 ,R

: @y C Lp9C-L@ @B UHDBE GE

9u ,XA
E E

ypuE4491+9G/8VL!

)PbH 56:uM6,X%06.vv4XIA

HGC1+9r)K mu :ksmCD,XE

4

21 5

22413

1 234

249 1

,E0o ,t-o ,/-i9 rt7L!

9u			
	99	99Hr	%
W	18,833,571,256.59		-15.63
W	21,823,174,755.17		1.86

W9L+b@E96.244Cu49

7

(2).

E

(3).

			1 (%)		1 (%)	(%)	
		232,881.55	6.46	219,579.02	5.60	6.06	1
23		148,794.04	4.13	144,819.22	3.69	2.74	1
		427,245.68	11.85	450,579.17	11.49	-5.18	1
		313,724.73	8.70	313,210.38	7.99	0.16	1
		911,423.12	25.29	1,264,187.34	32.25	-27.90	1
23		1,097,856.27	30.46	1,214,335.83	30.98	-9.59	1
		472,417.83	13.11	313,564.36	8.00	50.66	1

dA

E E

1 puHGrKS EtKS 56:)-7o4M

12HUsmtKSKmsmCDTL!

9Lu 4 GL7 67

EHC. 7 H7oLEAHGb

(4).

E

3.

E

)!

C- i9	318,191,728.22
C- i9	--
- i9 Au	318,191,728.22
- i9 N499! %	0.78
@-,,XDG	252
-,DG4@D,X! %	1.49
-i9C,XG %	--

A

4.

E

/,	D	HD	! %	A
1MC,X)GGN	3,082,669,104.05	-801,796,196.26	E	U2HCGaC t7

@y C Lp9C-L@ @B UHDBE GE

E

2016 H 6 NMuE .BA 3 3.74

2015 H@ ,BuybCD! @,X38@p LL@,X6u;A6uCD,X@E GAuG@B M6,XN.BA 2014 HiC, 2.72

E NM,ZK4

E

1.

)!Ö

NM,/	D	D4 C ,X! %	D	D4 C ,X! %	GNEW ! %	A
BCG	7,319,504,200.83	14.64	4,771,863,939.28	11.79	53.39	(1)

0	7,211,520.00	0.01	1,272,318.44	0.00	466.80	(2)
	4,491,429,639.19	8.98	3,037,900,340.25	7.51	47.85	(3)
	43,056,725.98	0.09	1,003,550.37	0.00	4,190.44	(4)

10 KS CU2r F 88 /C C TV%gUV,BVynuGp@P

11 E k/CU27c3rt7

12 M2C U 2)BH 7

13- ! U2 8 rt , - rt7

14@AuGAu93,,XGaBU2 @ 7

15! GaB U 2K@7

16h B! U 2 GC B rt7

17NX MU 2 49CG7NXrt

18h /C U 2 K @ 4v h/C rt 7

19h 6uU2 D6u6u7

20 BU 2C-a E 7

21h U 2 25 @ 7

22 rt, 7

49 Cd

1

(1).

E

p9C LPF6E6oEWBG

1AKNlp9C,Xp9C h)Up9C.

EE)NlBrE9AH4XT

E@4)W5E@p9C,X)Ep9C,X40n9

)CpLr2N,XLp6o Pp9C,XL0op9C

44-oLE9p9CDGEEPG46u1

4 p9CL6KL0o,XP76oTA

H4X)WCd8V4tp9CL

1,Xp9CLc-)U,X,0

C%p9CPG4,X9tU),XCt

CF)WFD5LG T p9C

:sm9CE1 11 5LG SGEEFT

Eds:LG COD5G 80-90%15(,X

f

2015 HAv,XEN)W:p9CQ9C

ZP,XUENp9CQ9COFmt,XS!

+-0,XntD;PP+-p9C,X-hTS

P+-p9CNNtN,G ,X7+(p9C+-Q9C

+-GG215(BE9(B,XLGn

Lc-)W,Xrt s f,1uoPf ,X

))NMH s)i9rt)5BE C4-

9G,XE

38,Gb9E, E@),Xr.BZ38-

E@4Z4XAHLD,)3K8-

6.LZ,X)G

(2).

E

124u

11

1

2015 H)24(M/:4 9000 5bNXAu 2020 H)E 11000 5b, XHErKS 5%

24ErKSNXAu 2020 H, XHrKS)4 8% CE 1800 5b b5b, X)1Lc-4, XEE)6d, XA HD+ 4.0C4KC48F)1/4)C24 L7E924, XrKS

,L, X24upuKmu 56:u

1.1 p

p9C4EH, X)6Z/-s9Ctsm KG+, XEWH, X2 2016 Hp9CED4 830p9CNC E 10 , Xp9C4 40 , CE 30 p9CNZ, X@B4Au4Au 2016 Hp9CGE 377.8 ! 10p9Cr)9 3008.19

@ pu6oNZ , s9C/T6oEW , K4 , 6 , X.CdEW, Xs9C./6o , ,, X/Cd , FK (, /%0oB9CuH0j , vCd, , Z, S ; uZ, nG , uKE NZ!X8CQ. , HK6 0, X%0o

1.2 K

K.sm, X24, XGULc-.- 24:, XE)tE)U, X, rEH9)K CE)E@/6ZD, X, K 6/-+EWH, X2CK9CK1 36 20 4 /KHK, XGCE 500+ , XK

@ Ku82)14K, X4981 , X)NZ58)10ZNZ!

1.3 56:

EB66wL5T6ou, XV/U4 7obvo4L 9: 5b9)NZ, X 56L5 6PPD , XE)EECS1/UuE

31 70% L,EWL76EWLc-)1 C
48NM6ohNL LE48F8NM48F

@ 56:uGKK,XE8NT06o),X
L5K RT,X 6PPD)N14NZ!
@9k2GkBE(M1CEB6E,XAA0Z)8
,X+90G2

2 56

)EB6GKS0nrKSEB6m,X 56 K)%0o
40(E) 56/M6/rE4ohrKS,)L Lc-KS
oLE9CbG56 E9CDB 2016 Hi6)EB

@ 56u/t9vu,X),X
564u ,,X/)!, 56t6o)!
@,X5%4F)40CKZ,EB6 56,X95%4
L2Gk(MBEM5o1)EB6,XGUoh

3 (

)444E9E@4AH,X6 C)K,X
C46rKS:8Lc-Eoi7Et;L5ob:
8L5 EOCb%5 6EWQuNL6o
AH)8)5bNI6EGELt5bn
(46GnF474CD)ONKEW)(
oZ,X)F

@ (u.))P0(NZ!
nL,XL5(uL b)EH9@/UA)(
5%4v96oL5LurKSEE 2013 HLc-@C)L
5E9 NewPort Tank Containers @6u /CE 2.3 T11 T14 T50
+t1/,XL5L5n1E9)! E9CC)4
nZ.r,X.

2 [redacted]
(1).[redacted]
E

1

E

(2).

E

	24	Usm	UhNZ	UE2
.	.	,	b46y,V m E G2 -2 4H) 8 (,X 4Nt t1 M6	sm o
!		! ON!	! ! .sm 1	o
8	24	! 8	9C m56 p9C VmEO 1	sm o
.18		.1GL8	9C m p9C1	
)!			bE)6 4 M61	
	p9C	+ +81	p9C	
2GE		+GL)GB1		
9		9GL-GC Gt + GB +8 1	p9C L89	
56L5	56	86 +GB 1	EB6 1 56	

(3).

E

4H PEtE/,X24E@,X+9@ t-

i95tE/ TpE@G)8N

2016 HH/Ti9 3.189 25.87 HEr+A 63

53 10 44+yG-AuNM, 4 NM9-6(

/T 3 NM

1u)2@ E9.BZ4-XXZ-2GA

M6 2016 HOF-G,XAkrBE)Hib 2017

H 4 7i9E9.@AArPBB,4k09ENM

,-00u8 2016 H @ NNLp9C-L@,XH

r)ZL2G-1u)2AM6M6S-NM, KK 1u)

4NM,1u)AAAu KK 1u)KPNM,1u),X)8 4Z

4KKAu,44NM,KKAu-,X/T

,1u)M6 ZL/T%1u)rE Ap8CQ

(4).

E

m K 8N /

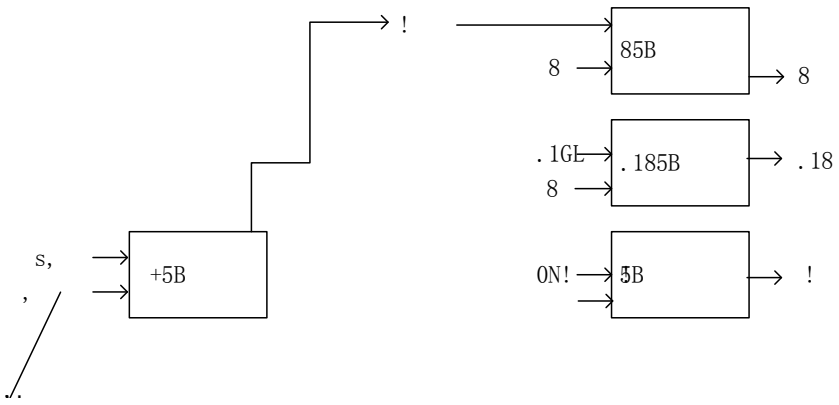

56 : 8N/

p 8N/

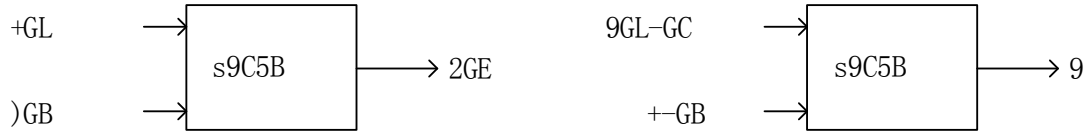

(5).

E

UVNM,	AAu6	6) %	6iC	6NXAu K
.	28 /H	96.52%		
!	10 /H	90.73%		
8	10 /H	90.27%		
.18	15 /H	92.47%		
)!	10 /H	104.50%		
	2000 /H	95.20%		
2GE	1600 /H	55.00%		
9	800 /H	86.88%		
56L5	13 /H	97.73%		

3

E

464X ,XAH

E E

M270

E E

3

(1).

E

1 (M/:u

sm	GC	GC GN		9, XE
86	KS4!	32541.0	2016 HC 5200 7 8500 K	nE rt
GB	KS4	2767.0	2016 HC 3500 7 7000 K	nE rt
.18	KS4	40635.8	2016 HC 3800 7 6400 K	nE rt
+GB	KS4!	29581.9	2016 HC 5400 7 11000 K	nE rt

224u

sm	GC	G C G N		9, XE
48	KS4!	58889	H 4530 / ,	
8	A	33077	H 385 / ,	
.1GL	KS4!	6291	H 983 / ,	
,	A	2954	H 185 / ,	
8	A	2103	H 175 / ,	

(2).

E

GL1, X

E E

4

(1).

E

(2).

E

n1+9U,X
E E

(3).

E

Au1A
E E

(4).

E

5

(1).

E

(2).

□

	%
22,034	0.54

yG)E
E E

(3).

E

1

□ □ E

)! /!

y iCN	130,009.06
H iCN	1,558.43
iCN rD	128,450.63
iCN r	8242.31%

(1)

E

iC)/	Uu	6u!	iCGN
Halcyon Agri Corporation Limited	56 E	54.99%	124,015.63
Lp9C- L@	p9C -	100%	5,993.43

(2)

E

(3)

E

A -	A 1T/	iC	4 A @ 6 u ! %	BM6	y3,	y 5 ,	Au 1k /,	6u 9d
06818.HK		405,627,028.19	0.17	164,538,653.19	-11,010,194.50	8,925,277.27	o GaC	7 C9
600596	6u	106,374,400.00	0.57	39,455,680.00	193,600.00	164,560.00	o GaC	7 C9
600919	38	8,160,000.00	0.03	99,640,714.41	-	77,758,607.25	o GaC	7 C9

E

AAK@b 2016 H 8 11 KA5%0KAAy
Ay,0,X 2016 032 @

E

(1)U6u@

7 SINOCHEM INTERNATIONAL (OVERSEAS) PTE.LTD.

A@0b 2003 H 6 C 2.11 5b@4 100%,X6u498

561,X@A@CN 1,028,761.48C 264,168.11

yr)9 1,061,332.66 r) 9,580.74

8 L(L@

2010 H 12 sC 159,100 HrC 190,797 @
4 100,X6uUL74EL74K74,XE
EgFCB(EEgLL1B(,XEEg)u 1yA@C
N 819,007.64C 306,624.13yr)9 406,215.76
r) 43,550.18

9 0(L@

A@0b 2011 H 1 C! 8 @4 100%6uUB(T
,XEupC49riC1uyA@ CN 276,132.55
C 74,345.95 yr)9 284,071.67 r) -3,363.27

: 9 :/TL@

A@0b 2008 H 5 C! 5.85 @4 60.976%6u s 38
9:/TL@H9:/TL@ A@U 56:
9C,X1uyA@ CN 461,208.27 C 374,208.18
yr) 9 232,509.18 r) 40,955.81

; 38@pLL@

A@D@p9CVb 1958 H 4 C 16,899.06 @4 40.53%,X6u
A@p9C.24,Xp9CyA@ C
N 1,098,039.58 C 647,760.20yr) 9 547,731.22
r) 54,852.23

Halcyon Agri Corporation Limited

A@ 0b 1934 H C 6.04 5b A @ U /t
6 1 u Lb 2016 H 8 22 A @ 6u,XC y A@ C
N 1,075,373.98 C 484,846.43y r) 9 651,547.50
r) -41,114.69

(2)U6u@

7H-E@E (7E)L@

A@0b 1990 H 4 2013 HZHd-E7EL@r
C 3,256.40 5b@4 44.8%,X6u498497-5
o--M2,yN(,XL,E@EuyA@

169,870.47 C 150,554.39@,1k9kiC, 7,327.13

8 SIAT NV

A@Ob 1991 H 6C 2,400 @4 35%,X6uA@Uu

56,X/tyA@CN 319,010.09C

151,899.16@,1k9kiC, -4,630.53

E

@ Gb@9),XAAd

E

124u

,L,X24upuKu 56:u

1.1 p

1.1.1

p9C+ ! , 94ErKS , CX ,

57 , EHU7EEX4X)Lv2u

1/EX9kEKS00

1.1.2 C

7 EH9)pKS)0nrKS ,CM44,X- ,

EWP,X,6dEEC /0)h

r)ZE)NXAu9)p0nrKS , n+5bEWr

EM6rKS5M6/L12PEp9CL)0nrKS8

EH9p0(,X+3Lot9CLrKSEW92

kp;99C8(;9k1M6P¦XL899LG

8 TM40C9CGU,X2Lc-p9CtP !

+-,X)0)WQ,X49EETp9CD:6

),XUCLc/)WNArp9C,XS

)W,XBM6E,CK,XGpp9C+-LGP,1u3

52

2 45

9 p9CHEH96E0Eo EW,Xp
9CE H,XL7E9PLc-48F)p9C/,XyE
PPP1-p9C/,X:6E9DHp9C ,X)C8
op9C3 HR,X+9F-LL
)EEtLNZ,X0:4E,X1u)4P,G-
ro,XCr)p9CM65)

:),1uC ,E) , tET4 , 9p9C
KS),X+C

; p ,XE) , 2N/4X1 , p9C4
XuSF1M69E

1.2 K

1.2.1

,)124K 40UL5b,X0F61+
4CK5244,X0U)Eo o
K,X0FTBG1M6C)4
,y0FKn,X0

K b@,X)! 8281GU5
smThGK0U224smLU,XCGi9
90hTf,7EE7D-PC9kPE9f ,XT
94rKSUnT,X.von,XPLtu
4,EWP-T,X6PLt,X

1.2.2 C

,K6/-+EWH,X9CK
p9CK1 36 20 4/ KHK,XGCE 500+
,XK024GU,X K 9 5H
EW,X)E4,XKEWQ,X)F

1.3 56:

1.3.1

56: K,EWP,XTf56L5GU,X 56:/20 PPDs
8620) 56L54B4! 9: 5b9)NZ,X 56L
5 6PPD,XGKK RTE8NTL5 6PPD,XGKOU2
8NTfEWP,! 9: 5b9P,X-A 2014H
9: 6PPD,XNNZKN309P

1.3.2 C

7)EB6 ,XO9) 56:LrKSoLpe4D,XL5 PPD
bEB6 ,8L5 PPD,X)EB6,X)C,G)QE:G,XGOr
KS(MEQGQE:vEB6,X6LEB6 On)oLpO 56t
GUEm,X 56: L

8 n(M4) 56:LGUrKS,+ EB6!
,XLrKSD1H)OEB6t,XGUEm
56: Lc-)EB6,X)5/n4)E,XN9
NE9ONK,4) 56:,XCtE 56
:E/

9 EB6GO9rKS48FEB6E 56:,XL4),XEB6
L,nC,XrKSEWEH9CfEHrEB6GrE
:EB6 O U,b)6E@/LrKSEB6H
4 EB6 ,XH4EB6 ,X9)sm,X8C
)4n.vEB6,XvEB648FE/3EB6m,X
4E/ 56: GB,X

2 56

2.2 C

7)QE:C,X4rKS 56Loo,Xe

85QE:EB6C4 56LG,X+b 56U v

LPEEB 6GnZ 56 ,X)C)LNXAuLc-5bS 4,XE9

8)QE:G)09rKSCatEQGQE:vEB6,X6L 56

oZo,Xe

8) 56L44nHE@/

,+ EB6,!X 56LULnLrKSD1

H)5o4rKSU97DSn14 56EB6V

0,XSK,XnE 6/,XEB63C 9CG

7Cd,X 56 u)0

9 56o44XAHH/M6/rKSEE

+b 56/EWKS19PEH9 56EW5/

,XUXNMHL)F4 56,X 56/

LCLc/,X)FVP@9Sn

56,X/EWBFM6@VC+S

M21H,X 56/M6/rKSEE+ 56oh2,X4E9P

3 (

3.1

7 8E

8E ,X949EFKKFK,X,1u4

9C8EuEN0k 88EEg49CB 8SEEL:EN0k EL

:49CB KEWP,XE9f+bE8DGEEoE,XM6S

kC8E,X0EW%L8L8E,XE

6uEKS7L+E6uL@C9C)8EK

L@K8GF7EL @9KT58uL@1,

5 L8E ,X/EWP 5bE,XL748+C

8u@V Stolt 0dfjellSE9C7E@149Zt4P

T1u)GEWP74F+ 0

8 L5(

2

2 2

9 22 9

2 Stolt,Hoyer Bertschi Den Hartogh Bulkhaul ,XL5

20,000 E9Z,)U

3.2 C

7 C,XErKS(oZ40n,XLeB8RUA@

Drewry,X4AuKEC,XrKS)4 2.1%KECGrKS)4

3.3%(u,X24sm5Ub44+

QE:1 L,On4)WE5,X)EW5

(94,XLe

8 o C +9EeEEGCE+G3EELK -

DCGC+G+GLCCCEEg,Xv4-E MTO MTP

NM,o+GsmE PTA NM,bC PX -GL3CE,REoF

AZEe5,Xuk09)

9 (,X)UPP0),X)0NK+bpFKE

H9)KNltG (,X,1u3C5Lc-,X24

/KT(M,X(,XC/39rKSBE

:84C,6C,1uFKP0v)M6,XU

(KT,XP09)F

:CLC,X(EEg,40KK,XuL56EhE

LE1/EEgLc-1u)6oAG6o,XE9rL54958E

,X,fQ XL5(LbL5LE-g5LC(EE

,yB(EEvnCLC,X4P(,XE)

,XH)L498EuL5(uC

-56(EM6hE90

( ) 0

E

@C24:48F@EENZ,X24,X

-,X24 9)9,X/B

1

0513

@u4+9n@6,X24Lu4n;

,XL+9)u ROEEE)Cd,XH6oA4

P,PKSurKSGKC,XG!

EE@

24u+99H@6.24,G u ROE,

p:QE::+:.)rGuEEGKCE,X

uG24u4!

(u+9)u)+9E96dEEg /U

ur)0n4rKS

56u+9M6))E9XL1u)vGt

GC4Xr)4,

1u+9+9n; 6oCH6o/T6oCE96o

Eh6o6 66oA6oA 44XSEQ6o:r1u

M

( )

E

2017H @ /S HPE ,X0/U+9:1uM

6.ovgFE,

1.:rNMG07oE,X24G4n+9,

EFH

2. 4E@1u0Eh)L,X44X1uX1u)

/2E9)

3. t-i9 .2.49+9)v2,X-

0NZ

4. 9) -0/U)tEG+9NM,09NM,1u)

2EGKC.

5. NM@M61u)LpuS+:r49.BH,E

6. 4ENM)0t)MH.B HSE,E

7. 4LrL0C a9E91u) ,Xu)M6Eh./

.,-77B54)-6,-7;4KBK 0E

,XE@@/:),X0oo.Lp

UM7Bts.X./

30 8@09)1u)2r,G0

)NL

(h) 5

E

@En//1(M&M,XsA

E

1h8V GUNM

E

BA,GbE9:r@)G4vGNM,XE-@1h:7

1 A 2012 H1 6uAEE,GbL9H6uy

,XAGbAv@0/,XA nZ@)G4v1,G/c(0

:76 E1E9.BZ4v4vA4,G@

y@rZ 2015 HG@6u 2,083,012,671 6uD6u

! 10 6u)G6u 1.1 /AuGCN 229,131,393.81

Lp@S6u,X, 4@ 1 :71 AuA EE,X 2016 HG!

NX KV 4Auu ((MBE)uAu 2016 HL@

yEr),X 27,422,563.43tHG! 1,062,117,902.54 2016

HG!X6u 229,131,393.81 a 10n,-@/ 2,742,256.34Ho6u

G!X 857,666,815.82 B@CG(A,Gb@4v ,X

Gn)AG@ 2016 H6u 2,083,012,671 6uD6u! 10 6u

)G6u 0.9%uGCN 187,471,140.394oG!X 21.86%

-G! 670,195,675.43 4E@HGNXNO@ 2016 H6u

EE @ 2016 HGNX0KA,X@)G4v

,X)G4v1U(0:7(00@0/uA/c,XnZ

iC5,X,

[redacted]

/ !

4v H	! 10 6uE 4v6uD 6u	! 10 6u CD ( ) /	! 10 6uE@ rD6u	)G4v, XDN /	4vHy 2b @ BE6u 6u , X	4y 2b @ BE 6u6u, X , X] (%)
2016 H		0.90		187,471,140.39	57,246,527.82	327.48

				29				

1L@1T/LLb 2004 H 12 10 1RAvFS!
0AKZSA LSA 10L6u6uK
aA0L,,u,X@ 2),XL,,u
,X@,X49E AGFS6),X0 3LSA
B2@K49(.Bn49s0L6u6uKVp
)L,yKy@uL0LA
LEWL,yKy,X@15 4L0
L6u6uKpL,yKy @L490
LULE At 5LSA6u6u,X!
L,XrL6o3L6u,X,

2B 2008 H 11 LE9r3E6u@,X3E6uA,y
:LSA r@03E6u,X16uG
U6,X9FS@3E6uK)Es,X@G0
@G3E6u,X(0497A3E6u6u,X,

3B 2007 H 5 2008 H 11 LCE9r+E3Ep9C6u
L@1T/3E6u@,X3E6uA,y:LS
AbFS5)s5,XG6(LSAFI@G@
7@,Xs1RAvA9 ,X/cAG6(1/c
5A5@G);GKA6u/
1Gn9 CMuEEG6(3L3E6u,X,3
36u,X ,

46uL@1T/6ub 2009 H 6 24 L1R
AvZFS0ABAA6uSA 10L6u6u
KaA0L,,u,X@ 2),XL,
,u,X@,X49E AGFS6),X0 3
6uSAB2@K49(.Bn49s0L
6u6uKVp)6u,yKy@uL0
6u ALEW6u,yKy,X@15
46u0L6u6uKVp6u,yKy@

1 3 5

6uSA6u6u, XL, XrL6o3L6u, X

,

5BLK, XG6(6ub 2009 H 6 24 LKG

b8G6(@(0, XSA0SA 16u

;@1 L0/, XGn S6u6uG

6uNM, XG6(E 9 FS, Xu6uSA04M2

4L, XCGC, X)UL6uo)

6, X, XG6(FIsGFSU, XG6(

449, XU, XG6(hAn, XE)FI, Xn

sFS3S6u, , X6uSA6FS!

LK96, XG6(bFS5)s5, XG6(

6uSAFI@7@G@, Xs1RAvA9 /c;

L@0/GKA6u/1Gn9 C

Mur)GyM/cAEEG6(3L6u, X,

6uG8G6(, XSAEb6u, X6u@6u

L86u@9 8LK4, 6, XG6(, X

u 2 @, 6u4L, X(0AL

, (0C(0Hu(0Bu(0X(0

66ub 2013 H 1 @KGb. BLBu@, CG, X

SA0SABA, 1uFK, XU6uL@44

GL, X497FNXL, XE0SAU, XG

/U. BLLBuLB@, ! XCG

7 2013 H 11 6uAC@M2@ 6uSAAC, X M2@ A

6u6u/7 43CKAkE@AAFr6u NXAuEK 2016

H 11 29

E

y CG4 E)

¶ E

@AuuM2uAuy, XA

¶ E

h @Au1AuAuGAu7sE, XdA

E

@GAu 7sE, XdA

E

313

¶ E

1 .GH,GNM

¶ E

GAANM

¶ H@GAANM

E

E

E

@:7,P41u), 6u 6urLC5.H

¶ E

y@6u6urLA(,XA

¶ E

@6u%Au,6uAu ,%,XE

(Ô) E

( ) E

E E

A

E E

,6uAu

E E

%

E E

3

1

E

NMVE	A2

@16u6uL@GbNX

Au@ 3 HG6(,X@

4	CC	CD	CC	7C CK7 y @ B),X	7H 7 @ B),X Eb ,X	G 6(V A n s	C C n s	,X C FE	,X u FE@ /	AC @B),X 4 N,X! (%)	G 6(G 2
L – 0L6 L@	L p9C – L @ 100% 6u	2016H 11 3	5,993.43	395.74	-3,673.49					-6.20	L @

@Lp9C–L@ 100%6u

3

E

4

E

1

E E

2

E

3

E

1

E

2

E

3

E

)! / !

G6(G6(G2

	3	68.97	-68.97	-	41.36	-41.36	-
（ ）	3	18.45	-18.45	-	-	-	-
	3	24.80	-24.80	-	-	-	-
	3	98.12	-98.12	-	-	-	-
9	3	2,790.44	-2,790.44	-	-	-	-
	3	103.38	-103.38	-	-		

	286,585.84
B	492,095.60
A+B	492,095.60
1 (%)	42.78
33 C	0
70% 2 D	445,175.99
50% E	
C+D+E	445,175.99
39	

( )

1

E

)! : / :!

,	,)B 20	,)BG N	,)BCK	,)B4 6	yG@. Bn	rL GGN	rL9k ,	4 En /c	Au GN	G 6(	A	G6(G2
C4 ,L @	,	50,000.00	2015/12/10	2018/2/2	4n	0.00	3,347.95					@ ,X C@
C4 ,L @	,	10,000.00	2016/11/29	2017/11/3	4n	0.00	0.00					@ ,X C@
C4 ,L @	,	50,000.00	2015/12/17	2018/2/2	4n	0.00	3,285.62					@ ,X C@
C4 ,L @	,	7,112.00	2014/12/29	2016/12/29	4n	7,112.00	1424.35					@ ,X C@
C4 ,L @	,	1,800.00	2016/9/7	2017/9/6	4n	0.00	0.00					@ ,X C@
C4 ,L @	,	8,200.00	2016/9/7	2017/9/6	4n	0.00	0.00					@ ,X C@
	,	13,000.00	2016/11/29	2017/11/3	4n	0.00	0.00					@ ,X

		3,500.00	2016/9/14	2017/9/12		0.00	0.00					
3		2,300.00	2016/12/14	2017/12/14		0.00	0.00					
3		9,000.00	2016/12/14	2017/12/14		0.00	0.00					
3		8,700.00	2016/12/21	2017/12/21		0.00	0.00					
3		23,000.00	2016/1/14	2016/12/19	1	23,000.00	959.19					
3		19,000.00	2016/2/3	2016/12/19	1	19,000.00	792.37					
3		100,000.00	2016/2/18	2016/12/26	1	100,000.00	4,170.38					
3		58,000.00	2016/3/2	2016/12/19	1	58,000.00	2,418.82					
	/	491,361.00	/	/	/	245,531.00	18,479.58	/		/	/	/
90												

2

E

3

E

( )

E

A GNM, XA

E

/U9 /B, X0

(Ô)

E

( )

E

@/B0@ 2016 H/By yKA5%0-

http://www.sse.com.cn/

( ) 2

E

( )

E

E@6@

E

E

E

E

E

E

1A8V BE6u6u6u

1

y@BE6u6uD6u4X

2

E

3

E

4

E

E

)! : 6u

6u/	H L6u D	H L8L 6uD	H rtL 6uD	H L6u D	Ls	L8L
6u L@	359,888 000	359,888 000		0	M2@ 6u/	2016 H 11 29

A

E

)6u /!

6u/! A, X/20		)	DG		9 DG	46
BE6u6u/20						
M2@ 6u/	2013 H 11 29	5.79	645, 423, 100	2013 H 11 29	645, 423, 100	

3						
	2012 3 5	4.85	700,000,000	2012 4 12	700,000,000	2016 3 5
	2012 3 5	4.99	1,200,000,000	2012 4 12	1,200,000,000	2019 3 5
	2016 6 6	3.61	2,500 000,000	2016 7 1	2,500 000,000	2021 6 6

7 y A ,XA,4),XAA

E E

@b 2012 H 3 5 ,XL6u6uL@ 2011 H@

4 H 7 HL1 5 H A/M6)EiC5E/ 4

H/ ! 7 7 H/ ! 12 4 H//M6

) 4.85% 7 H//M6) 4.99%G)HAuCAu HC

ECLcG,X%CK

@b 2013 H 11 5.79 /6u,XM2@ Z 645,423,100 6u6u/E 6

XZ ACELCG 3,736,999,749.00

@b 2016 H 6 6 ,XL6u6uL@ 2016 H@L

5 H ! 25 /M6) 3.61%G)HAuCAu

HC ECLcG,X%CK

( )

E

( )

E

6u rL

6D

6y BE6u 6uD ( )	74,976
HyM!XBE6u6uD ( )	75,162
6y 6,X 6u6u D	0
HyM!6,X 6u6uD	0

:6u

6u6u							
6u/ /	y r	6u DG	! (%)	L 5 6u D G	B4 6u (	B4 DG	6u B
6u L@		1152988931	55.35	0			
GC1u)LB@		50611100	2.43	0			WM2
K-L LCL @	-2,452,864	37600000	1.81	0	B	26320000	WM2
.A iCL@		33200000	1.59	0			
p 6u L@ 5+KS AiC G	541,237	30163761	1.45	0			WM2
/G L4	-3,000,235	24991091	1.20	0			WM2
6u L@ rFIG! 5BCK AiCG		12820028	0.62	0			WM2

3 2	30163761	3	30163761
1	24991091	3	24991091
3 2	12820028	3	12820028
3 2	8000000	3	8000000
3 LOF	7987560	3	7987560
	7829010	3	7829010
33 4	10 3 3		
3 33 3			

L56u6uDGL5
E E

E

6u6urL

1

E

/	6uL@
)BBn	UPU
0	2009 H 6 1
U49 u	L6dpGahNZ -@, Xpi9 6y/p9C49NZ, X4 uP0GkM2 GaNZKEW, XE o SINOCHEM, X(8CQ@ Lb 2009 H 6 HG4A066u 0L49E0, XUEQ
y6u6u, XW @, X6u	6 2016 HL8L@p3E6u

				2016 12 30	2019 12 28						
	4		39	2016 5 19	2019 12 28					27.7	
	4		51	2015 1 8	2016 12 18	76,000	76,000				
2	4 1		47	2013 12 19	2016 12 18	40,800	40,800			216.3	
			53	2014 5 9	2016 12 18						
			43	2013 12 19	2016 12 18						
	1		52	2013 12 30	2016 12 6	35,700	35,700			130	
2	4		42	2013 12 30	2016 5 19	32,000	32,000			65.4	
	/	/	/	/	/	312,500.00	312,500.00		/	1,012	/

	U04Z
	1963 H L:L6 EMBA.)P4Lu!/:-AE44F1-0FFC4A-, E@1uFC4)F4)F4)EL@r@:7C4)0E@ L@ 4)) L@)PiCF4).4,C-3,-LL@ :LL@ :7KS.:A4)6uL@:7P6y.:A 6y6uL@; :70j; l)L@.4,C6uL@:7:LL@.:A:7KS4) (Mo)rL@:7 :7KS , 9CL@:7KS-38(ML6uL@:7KS ,@:7KSP+9,
k	1964 H :1u):! 1990 7 1993 HCHt(M:E1u)A/ 1994 Ht9LZAuBuF4))BuFC4)iC)FC4)CG1u)F4)CAu16 u) L@AuGaF.:AP 6uL@Bu,@:7
	1970 H):AAuE.)! 1994 Ht06 bE@EuF 2002 Ht9L LB@4))C4)L 6uL@oCdFC4)) L@.444,oCdF,@ :7
4v	1966 H:::/KK: EMBAC40F/,CKSPOSOZuC21/ :16 u 2000 Ht9LZ@r@L@4)@; F4)(FC4)PL5F4)(F4)(@4)16 u)@:74).:A
:	1947 Ht52! ,%nL9: (Adelaide University)9k/::(MA/ 1974 Ht98(-@ SHELL 24/+9AP4d( )Auu4)t5(@P,K(-L@0j; l CEO ,

	25922 4 3 VOPAK 44 4
	1959 3 1 1 33 4 4 4
1	1965 1 ( ) 4 4 41 3 4
1	1966 1988 313131 31 3 1 111 3 1 3 111
	1975 51 1997 31 11 11 /3 1 3
	1964 3 EMBA 1988 51 31 1 3 3
	1960 34 EMBA9 0541414 4 311 054
	1970 1 3 EMBA 2001 1 0 3 111 1 3 1
	1962 22 2 TDA 2 3 2016 12
	1977 MBA03 3 3 3 111 131 231 1 3 41
	1965 3 EMBA11 411 141
2	1970 3 EMBA11 3 1 2004 1 141
	1963 11 EMBA 1989 231 11 11 11111 0
	1973 3 31 3 1999 8 111 1
	1964 51 - 3 MBA331

	1 1 2002 111 31 34 4
2	1974 3111 3 EMBA4 424

WA

E E

E

)y/:7,P41u),,X6

E

6 ,	6u)!	6u),!X6 u	CK	46
	L@	C4).4,	2006 H 1C4) 2010 H 8 4,	7
k	L@	Au	2010 H 8	7
	L@	oCdF,	2016 H 12	7
4v	L@	uAuF,	2016 H 12	7
!	L@	+9FC,	2016 H 12	7
r	L@	4))	2015 H 1	7
W5	L@	pF.:A L4)) F	2016 H 12	7
)r	L@	4,F	2016 H 12	7
/	L@	pFC.C :A	2017 H 1	7
6u)6 ,XA				

E

6 ,	)	) X6 u	CK	46
	:LL@	:7KS. :A4)	2014 H 03 11	
	9CL@	:7KS	2015 H 1 27	
	(Mo)rL@	:7KS	2015 H 11 6	
k	6y6uL@	M2; :7	2010 H 8 26	7
	LBuLB@	:7KS	2010 H 11 8	7
	c LL@	C:7KS	2010 H 8 20	7
	POESG-L@	:7	2010 H 5 31	7
	EcL@	:7	2009 H 10 16	7
	rEiC6uL@	:7	2010 H 6 14	7
	4C, L@	:7KS	2014 H 3 18	7
	G86uLL@	:7	2014 H 2 24	7
	G86uLL@	:7	2015 H 5 27	7
:	+NRK	NRK	2008 H 1	7
	9KD, . @	, -7:7	2011 H 4	7
C	K6(u	P4	1986 H	7
	L4C,	,	2000 H	7
	K,	,	1995 H	7
	KS++L6uL@	(0:7	2014 H 4	7
	K19C6uL@	(0:7	2012 H 6	7
	EC6uL@	(0:7	2013 H 12	7
d4KS	A 6u L@	(0:7	2014 H 8	7
	K+70N 6u L@	(0 :7	2016 H 11	7
4v	/LL@	,	2011 H 8	7
)r	-L@	,	2014 H 3	7
	LBuLB@	,	2014 H 3	7
	4C, L@	,	2014 H 3	7
/	MorL@	:7	2012 H 5	7

		4	2013 1	4
			2015 6	4
1		4	2016 12	4
		4	2016 12	4
	Halcyon Agri Corporation Limited	4	2016 12	4
	05	4	2016 12	4
		4	2016 12	4
	4	4	2012 5	2016 12
	5	4	2012 6	2017 2
	Newport Tank Containers,LLC	4	2013 7	2017 2
		4	2013 8	2017 2
	25	4	2012 5	2017 2
		4	2005 8	2017 2
	SINOCHEM INTERNATIONAL FZE	4	2012 6	2017 2
	SINOCHEM ISOTANK FZE	4	2007 7	2017 2
		4	2001 5	2017 2
	9	4	2011 9	2017 2
	9	4	2011 10	2017 2
		4	2008 8	2017 2
	Newport Tank Containers Korea Corporation	4	2013 10	2017 2
	2	4		

	0 3	4	2016 3	4
		4	2016 5	4
		4	2015 1	4
	2	4	2015 10	4
	2	4	2013 9	4
		4	2010 7	4
		4	2010 9	4
		4	2010 10	4
	5	4	2015 3	4
	05	4	2015 3	4
	3		2014 2	2017 3
	2	4	2013 9	4

	4		
	4		4
2	41		
1	4		4
1	1	3	
1			
		3	
	1		
2	4		
	4	3	

h EHA, 1uX5. , XA

¶ E

A @U@,X,

	605
	16336
	16941
	1231
	12988
	681
	1143
	402
	1727
	16941
	596
	2463
	2611
	11271
	16941

E

@4u ,XrC 1u)0Z@u

)L;Eh,X%+-,,X;G@/c2G/:8,X/c B;

G@/cG@G@7

0H1U,X.@

XZ/L@/G1,X,Lp2,o+kL

B19LAu9Au;AuG6 (M11LpZ,

,X,LE0Z6 44A,/c,

A,14,,EE8EX @491u)A)1@

1RAvlG,(M;NMCLA

4,,M6y LpFK,X,-7

E

GL),XE@4)+9or)24:48F

,X+9C:@LU0K)GKCE96cPRPA)

L 2016 H0 GROWTH :L6ENZoE@
SQEEAP1u)h)GkuAu)0AAu
) EELGKK6.LHar A-
12) ,A 2500 - 9K:4FAA 200 -h
b 11 AA
ESywC:GEC4V,XaEAE
EP1u 100%w6 10 A7)AAAE0jM GROWTH
S16r):rCD

E

u,XD	1,775,050
u,XyG@N	5857

E

118V @)

E

y@;@A@)@0
/A,G,XUX@)4X8@E0
1Gb6u6uy @EZ 1 H6u 2 6u
@;KA6u/@0/@6uA
,XnL@Z 6uLp6u6u,XG1
6uA)AK:Z :A@6u
,XL/c06uA@0/,Xn
@G6(,X1/c.B,Xnn; .BZG6(,X@G)
2Gb:7:7@:7+ 7 :74(0:7 3 :7A
+9,@),;G@5,uAuNL,(0:7
@),;G@5,uAuNL,6 u
:7GU,X,X(0:74D@uAG491

2016 H

@!7;, GC,X;:7ArA

S9 u

Gby@(0:7,X96 A 2017 H 4 29 K5%0@,X

L(0:7E6 y

3Gb,,@, 3, 2 6u, 1 6

,6 ,+@6 E0,Gn0

,Bu@7HHBuy1NM:M6u

@:7P41u),9 6 u,X E ,-7@GiCGBu1NME

,-7

4Gb,G,5@6G4,G,5,X,/U,G

,50t,XsBG4 6 v1

,G,5,X,o@94)

5GbCME@:7/:BB@,XCM0b@,X

496GE@6uGE,XC@;@0/

CM,XnE CMnAyAy

KAy5%0@CM,Xy45%0- ;G,Xn

@CM1u),XU,r.BH,XMC

6@ 2010 H0ZHyCMGBE0y

GAu7GF+C94NX71HyCM,XBGE

E9

7B@AKA6u/1

4@1h:71 AuAEEZ)C-,0A@;E

n;)C-,0A1u),X,GnL6M)CACM,X@

G @7,)C-E@6u,XGCM!

)CD@6u,X

@)A,,Gn,XU,GVChAs

,@)4XEWXA,G,XU,HHb@

)NMKS4,X0,X0@)049)

;,G8,XUEX@)G46u

,LpE@909)

@)A, , Gn, XU, G V G hAs
E E

6u1T

2015	2016 H 5 Ü 6 ¹	www.sse.com.cn	2016 H 5 Ü 7 ¹
2016	2016 H 3 Ü 16 ¹	www.sse.com.cn	2016 H 3 Ü 17 ¹
2016 H `	2016 H 12 Ü 23 ¹	www.sse.com.cn	2016 H 12 Ü 24 ¹

6uA
E E

:79 6 B

		1	0	1	0	0		0

:7AK,y9 6 B,XGUA,A
NM,XhMK

E

h ,)@ ,NL,XA

E

A @6u6uu,CXBu1M6,,X6A(0
67496o,XA

E

,0,X@,h,X0E40Au
E E

yP41u),,X5A%,X0r

E

MF7Ay

E

@F7AAL 2016 HFAy y
KA5%0- http://www.sse.com.cn/

yF,G5LK,XA
E E

1 FuAuy,X,GA

E

uAuy@7A7
MFuAuy

E

18V @,G

E

)! : / :!

/	1T/	–			–N	)	EC	
L 66u L@ 2011 H @	11 02	122124	2012 H 3 5	2019 H 3 5	1,200,000,000.00	4.99 %	)HAuC HC C Lc G	KA
L 66u L@ 2016 H @	16	136473						

[illegible] Ä 11 ê 02Å	[illegible]	[illegible]
	r @	[illegible] 48 [illegible] 22
	[illegible]	[illegible]
	[illegible]	010-60833799
[illegible]	[illegible]	[illegible]
	[illegible]	[illegible] 760 [illegible] 8 P

[illegible] Ä 16 ê Å	[illegible]	[illegible]
	[illegible]	[illegible] 6 [illegible] 16 P
	[illegible]	[illegible]
	[illegible]	010-56513200
[illegible]	[illegible]	[illegible]
	[illegible]	[illegible] 760 [illegible] 8 P

[illegible]
E E

@ L CGS
[illegible] E

[illegible] @ 2012 [illegible] 11 ê 01 ` 11 ê 02 [illegible] 19 “ È 78 [illegible]
[illegible] È J 16.86 [illegible] [illegible] @ 56 [illegible]
[illegible]

[illegible] @ 2016 [illegible] 16 ê [illegible] 25 È J 15 “ [illegible] ó
u È = 10 “ 78 [illegible] [illegible] Ä @ [illegible]
[illegible] [illegible] È [illegible] 31050161369900000216È [illegible] 2016 H 12 Ü
31 ¹ È [illegible] [illegible]Ä
[illegible] [illegible] È [illegible] [illegible]
[illegible]

[illegible] @ [illegible]
[illegible] E

Gb 11 02 AAAL@ 2011 H 7 21 An @ 1
4 AAAA4)0n1 4 AAA AAAL@ 2016 H 5 10
11 02 E ZCC A414 AAAA4)0n14
AAAAAAL@ b 2017 H 5 B y @@ E

http://www.sse.com.cn AiC5 G

Gb 16 AAAL@ 2016 H 5 31 An @ 1
4 AAAA4)0n14 AAAAAAL@ b 2017 H 5
B y @@ E CCA4 A44p A K A5%0-
http://www.sse.com.cn AiC5 G

h y @ rSAu,G
E
y E@r,XfSAu@
;LA:4n C%

A @A
E

	1.99	3.34	-40.42	
	5.17	6.38	-18.97	
EBITDA	4.90	5.52	-11.23	
	1.0	1.0	-	
	0.80	0.75	6.67	

1 @uaCK,XC%

E

y @uaCK ; 4n CN C %

@y,X

E

7 2016H @N 484.6S 118.9S

-N 365.7 y @ ; 4n C! CN C

%

@y; @LA:,G4nSA,X

E

7 2016H @79 LA:,G4nSA

@,XG NM @49S6o,XE

E

@ 2016H 9 CB 225.6 2015H CB 126.5 3Au r

! 99.1 4 2015H 4uAuC 196.3 ,XG 50.52% CE 20%E

rt U 2s 1r @ C-a 2 C Halcyon Agri

Corporation Limited! Halcyon Agri Corporation Limited 7D CB 3 9

9ECG NM @b 2016H 10 27 KA5%0-

http://www.sse.com.cn @

6 2016H@ CB 202 @ NM u 49 0nCB,X

%(Ga0RF9

18V Buy

uAu y

E E

uAuy

;

;

	6u								

;

;

;

;

;

;

;

;

;

;

;

;

;

;

;

;

;

; ;

;

;

;

;

;

;

;

;

;

;

;

;

ëõ ½Ë ? %Et s Á i •¶12

;

;

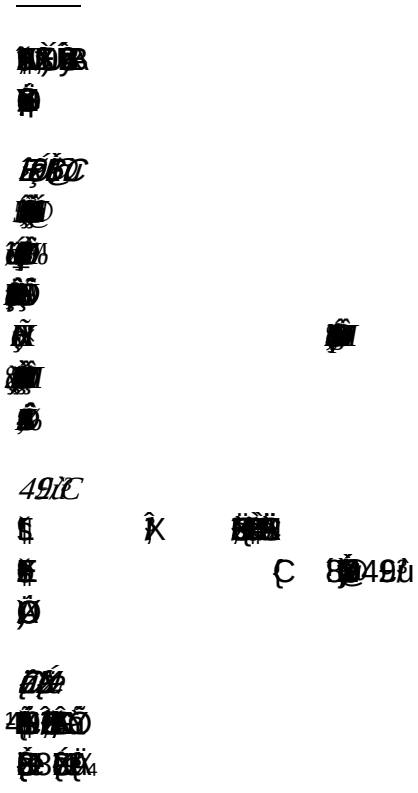

;

;

; ;
;

;

; ;

; ;

; ; ;

;

;

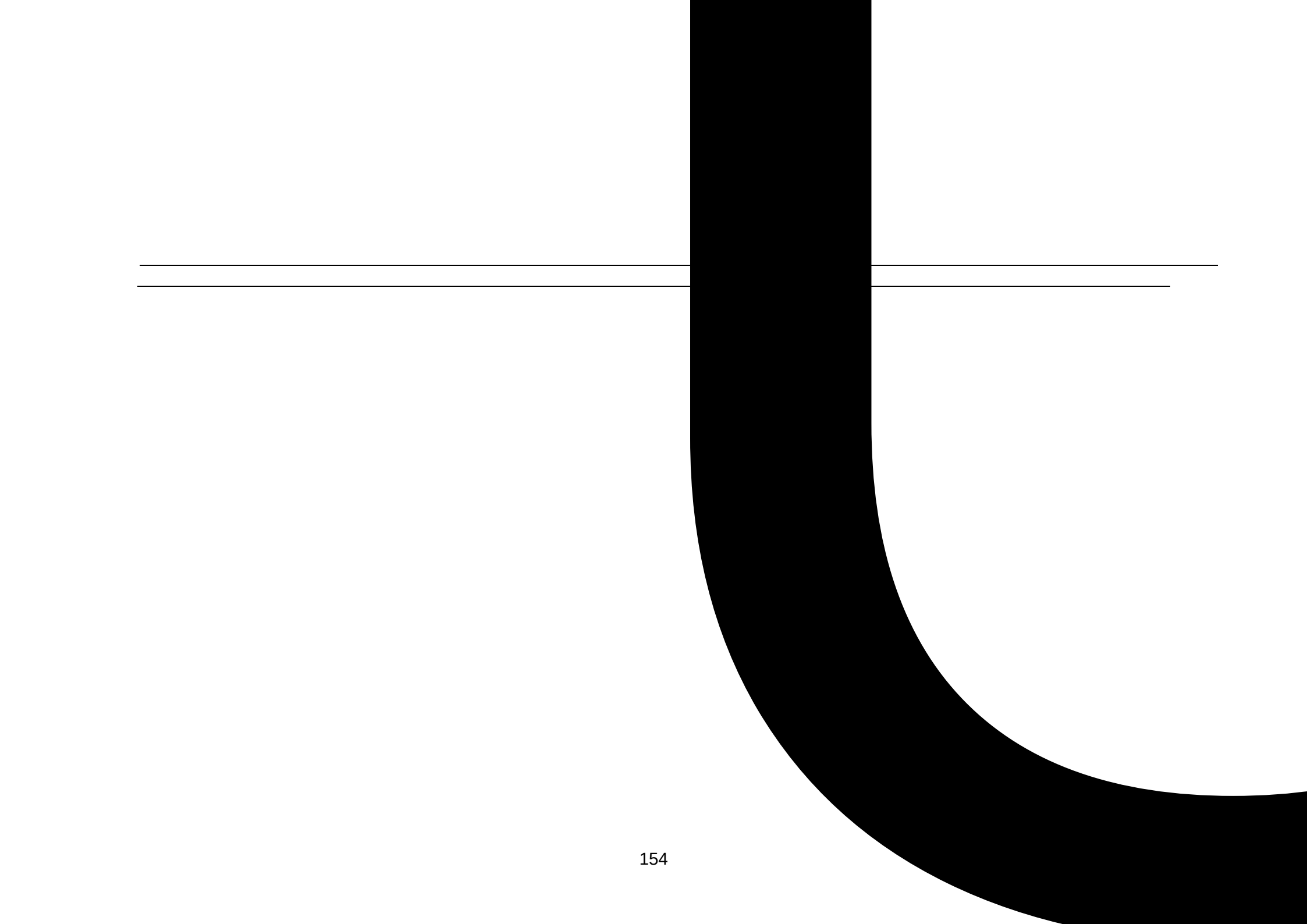

;

;

;

;

;

;

; ;

;

; ;

;

;

; ;

;

;

;

;

;

Ã 4Á

Ã 4Á

;

;

;

;

;

;

Ã 4Á

43 2 2 2 3

;

;

;

;

; ;

;

6 5 6

61,935.60 5 4

69370

7 7

474,458,940.83 51,285.60

5] TJ ET EMC /P <<</MCID 33C BT C BT /F4 6 Tf 1 0 0 1 [illegible]

[illegible]

7 4

[illegible]

6 8 Tm [<1BB90717>] TJ P/MCID 197 EC BT /F4 6 Tf 1 0 0 1 132.5 439.18 4,461.79

4

;

;

;

;

;

;

;

; ;

;

; ;

;

;

;

‘ 8 E ‰Mģ QfBv H”Öþ™E 0H”Öþ # E H”Öþ 3cE 0H”Öp289.™ C•0H”ÖþŸIñ `p ‰œMģ€™BrYC9 4(b1P | t šÀ‡À

;

;

;

:

:

2.034.476.999.

—

;

;

; ;

;

18V ,)

,)	EQn 1u Au0 BB Au XBB Au 1u, 1R , 0, X Au y
,)	EQAuu , 0 Au1R, 0 , XuAuy s
,)	y A,